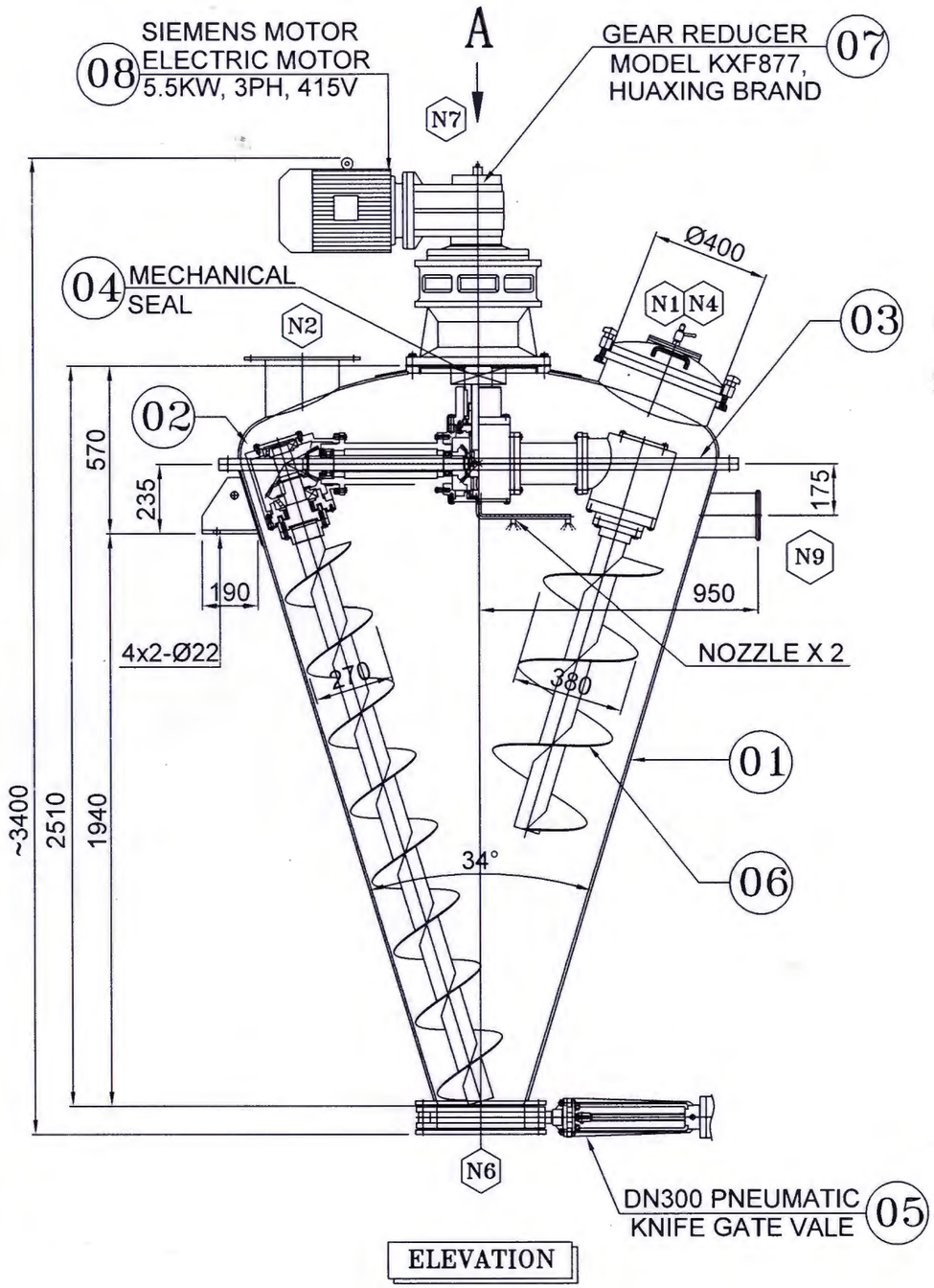

ELEVATION

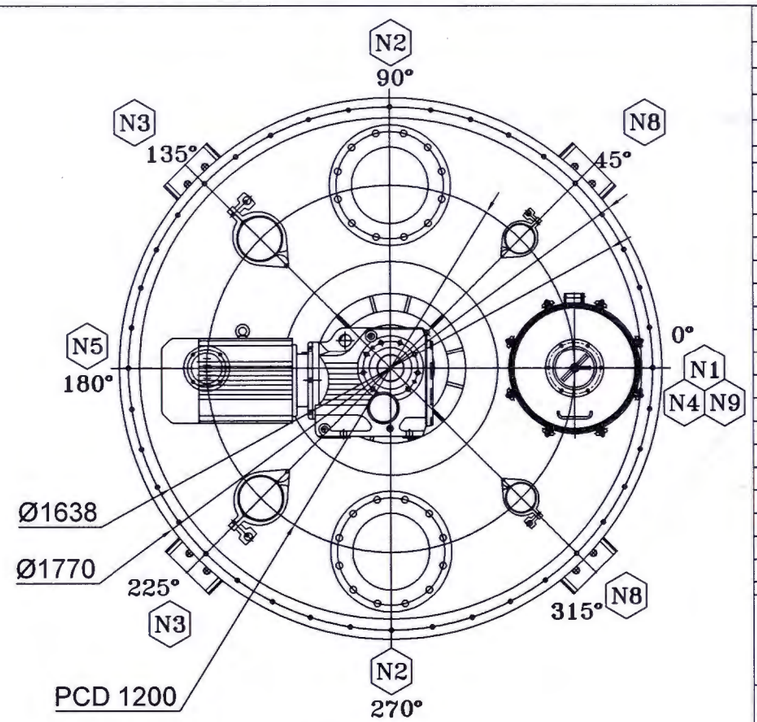

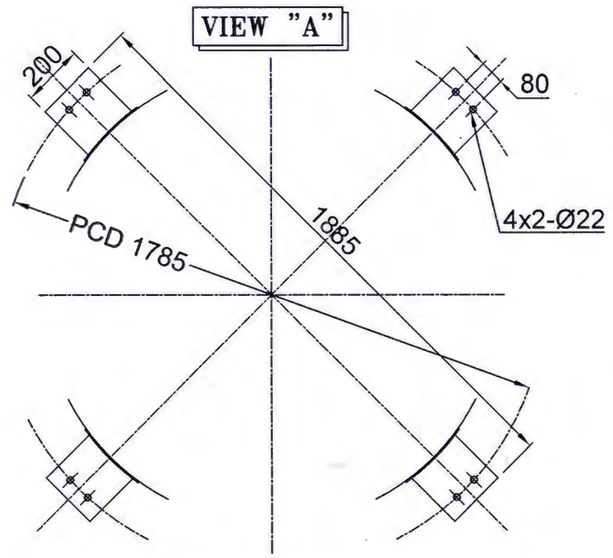

LUGS DETAIL

UTILITY REQUIRED :-		
01	POWER SUPPLY	415V / 3PH / 50 c/s / AC 11 AMPS.
02	TOTAL LOAD	5.5 KW
03	COMPRESSED AIR	10CFM @ 8Kg/cm2
04	CABLE SIZE	1.5 mm^2 COPPER

DESIGN DATA		
DESIGN CODE :– GOOD ENGINEERING PRACTICE		
		SHELL SIDE
DESIGN PRESSURE INT/EXT	mm–Hg	760
WORKING PRESSURE MIN/MAX	mm–Hg	400
DESIGN TEMP. MIN./MAX.	°C	AMBIENT
WORKING TEMP. MIN.MAX	°C	AMBIENT
HYDRO TEST PRESSURE	Kg/cm^2 g	1.5
CORROSION ALLOWANCE	mm	NIL
JOINT EFFICIENCY		0.85
GROSS CAPACITY	LTRS.	2000
WORKING CAPACTIY	Kgs.	––
EMPTY WEIGHT	Kgs.	––
WEIGHT WITH FULL OF WATER	Kgs.	––
BULK DENSITY OF PRODUCT	Kg/Lt.	0.2 TO 0.25
MODEL		––
INSPECTION		BY CLIENT
PACKING		WRAPPED IN PLASTIC

FINISH OF SS SURFACE :– INTERNAL SS Part MIRROR FINISH
EXTERNAL SS Part MIRROR FINISH
EXTERNAL CS Part PAINTING RAL 7045

MOC:–
01. ALL PRODUCT CONTACT PARTS ARE SS 304
02. ALL OTHER NON CONTACT EXPOSED PARTS ARE IN CS
03. ALL GASKETS ARE IN SILICON FOOD GRADE

SPEED:–
01. ARM SPEED 2.2 RPM
02. SCREW SPEED 78 RPM

NOTE: 01. ELECTRIC PROTECTION IP55

BILL OF MATERIAL

SR.NO	DESCRIPTION	QTY.	MATL.	SIZE
1.	MIXER SHELL	1	SS 304	SS 304 8MM THK.
2.	DISHEND	1	SS 304	SS 304 8MM THK.
3.	FLANGE	2	CS	PAINTED
4.	MECHANICAL SEAL	1	STD	SEAL FOR SHAFT
5.	DISCHARG PORT N6	1	SS 304	ø300 PNEUMATIC ACTUATED KNIFE GATE VALVE
6.	ARM & SCREW	1	SS 304	STD
7.	REDUCER	1	KXF877	HUAXING MAKE
8.	MAIN MOTOR	1	5.5KW	3PH, 415V (WITH VFD)

APPROVED DRAWING

NOZZLE SCHEDULE

NOZ. NO.	SIZE NB	SERVICE	QTY	SCH/ THK	TYPE
N1	ø400	MANHOLE	1	STD	SIGHT GLASS WITH WIPER
N2	DN250	SPARE PORT	2	PN1.0 GB–T5010	WITH BLIND
N3	ø150	PRODUCT INLET	2	TC	TC WITH BLIND
N4	ø150	SIGHT GLASS	1	STD	SIGHT GLASS WITH WIPER
N5	ø100	LIGHT GLASS	1	STD	WITH CONE AND BULB HOLDER
N6	DN300	DISCHARGE PORT	1	PN1.0 GB–T5010	WITH PNEUMATIC KNIFE GATE VALVE
N7	1/2"	LIQUID INLET	1	BSP	––
N8	ø100	SPARE PORT	2	TC	TC WITH BLIND FOR AIR PURGING
N9	ø150	SPARE PORT	1	TC	TC WITH BLIND

REV.	DESCRIPTION	DRG.	CHKD.	DATE

CLIENT :– M/s. INTERTECH TEHNOLOGIES PVT. LTD.
PROJECT: ----------
LOCATION: ----------

DRN.	SWAPNIL	TITLE :– NAUTA MIXER GROSS 2000 LTR	QTY. 5 NOS
CHD.	MAHESH		SIZE A3
DATE	08–11–2017		SHEET 1 OF 1
SCALE	NTS	DRG. NO. :– INT–GA–10468A	REV. R0

ALL DIMENSION ARE IN MM, UNTIL & UNLESS SPECIFIED

PRELIMINARY DRAWING | CONCEPT SALES DRAWING | * DRAWING FOR APPROVAL | DRAWING FOR PLANNING | DRAWING FOR PRODUCTION | DRAWING FOR PROCESS | DRAWING FOR ERECTION