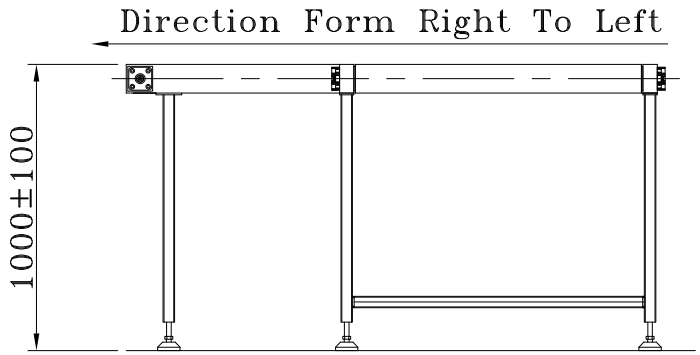

ELEVATION

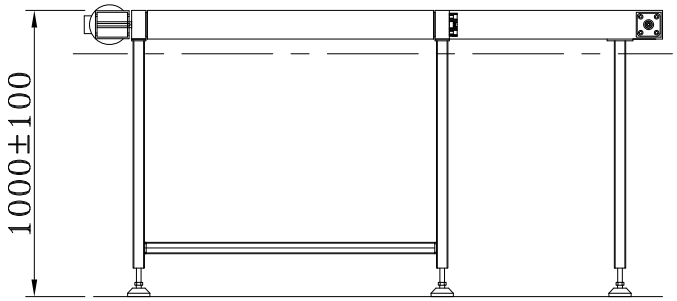

SIDE VIEW

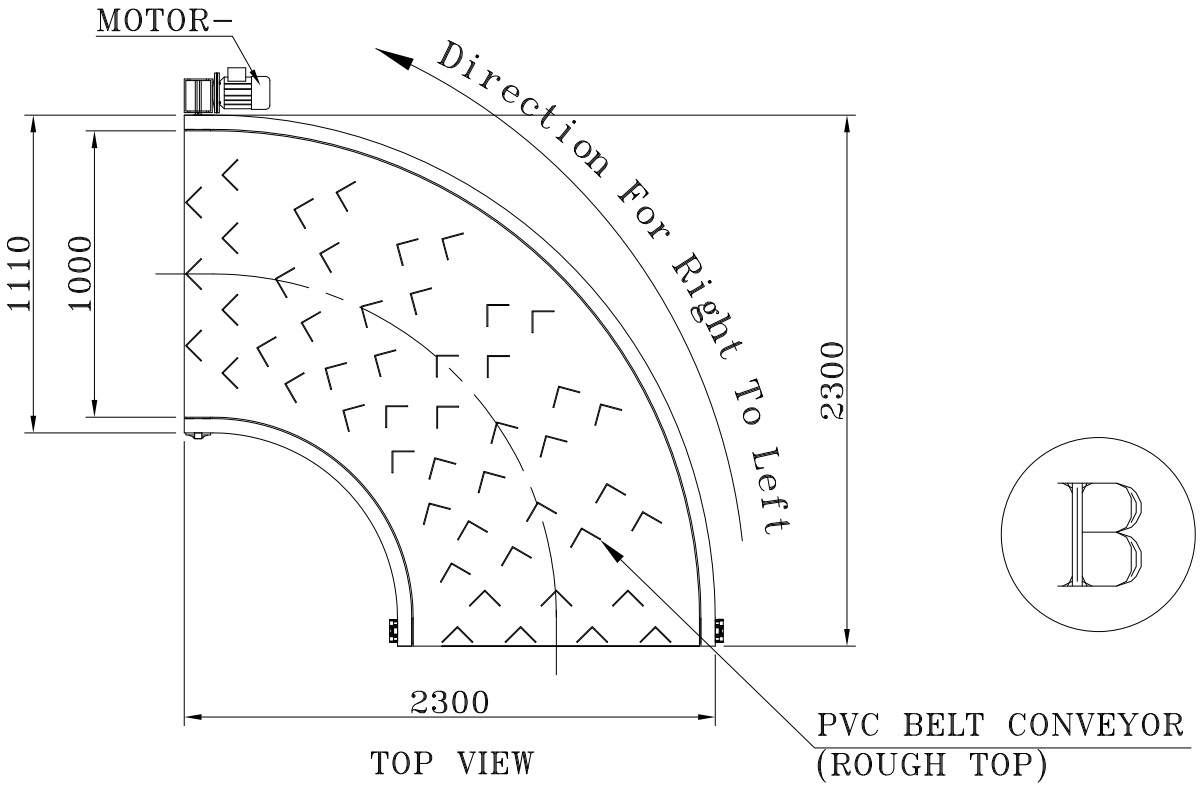

TOP VIEW

Note:– Size Of Shipper Box in Bag (900 x 400 x 880) Weight 30–35 As Per Product
Size Of Shipper Box in Bag (740 x 340 x 800) Weight 25–30 As Per Product

90° BELT CONVEYOR

MAIN SPECIFICATION

CONVEYOR LENGTH:– 2300 mm
CONVEYOR WIDTH :1110 APPROX
CONVEYOR HEIGHT :1000±100 mm
BELT WIDTH:–1000
BELT TYPE:– PVC BELT CONVEYOR (ROUGH TOP)
BELT SPEED:–ADJUSTABLE SPEED 20 MTR./MIN
MOTOR DETAIL:–?
GEARBOX DETAIL:–?
CONVEYOR SUPPORT STAND :– SS304
CONVEYOR BODY:– SS 304 x 3 Thk.
QTY:–1 No.

DRN.		GA. OF 90° BELT CONVEYOR	QTY.	
CHD.			SIZE	A3
DATE			SHEET	1 OF 1
SCALE	NTS	DRG. NO. :– INT–KYT–90BCFJ–20200124–01	REV.	R0

CLIENT :– M/s.
PROJECT :– CARTON CONVEYING SYSTEM (JHALL)
ALL DIMENSION ARE IN MM, UNTIL & UNLESS SPECIFIED